# TVD-CB3B-W

**TruVision Cup Base for M Series fixed lens white dome cameras, white**

## Overview

With the TVD-CB3B-W cup base, M series fixed lens white dome cameras can be installed on wall/pendant mount brackets TVD-SNB-W, TVD-CBW-W and TVD-PPB-W.



## Details

- Compatible with M Series fixed lens white dome IP cameras
- Compatible with wall/pendant mount brackets TVD-SNB-W, TVD-CBW-W and TVD-PPB-W
- Designed for convenient wiring

# TVD-CB3B-W

## TruVision Cup Base for M Series fixed lens white dome cameras, white

## Technical specifications

### General

| | |
|---|---|
| Bracket type | Camera |
| Support type | TruVision mini domes |
| Bracket mounting part | Cup base |
| Mount type | Pendant mount |

### Physical

| | |
|---|---|
| Physical dimensions | Ø 140 x 66.6 mm |
| Net weight | 220 g |
| Colour | White |
| Material | Aluminium |

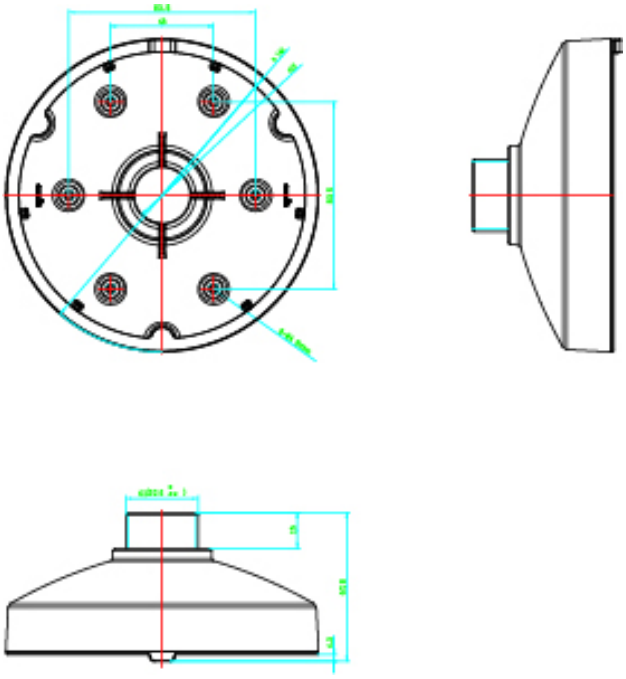

As a company of innovation, Kidde Global Solutions reserves the right to change product specifications without notice. For the latest product specifications, visit firesecurityproducts.com online or contact your sales representative.

Last updated on 13 August 2026 - 19:41