# KE-AS3015W-CM

## Excellence Series intelligent addressable sounder/visual alarm, ceiling mount

### General

The ASC2366 is a RED bodied, shallow base addressable ceiling mount room sounder/VAD for fire alarm systems running 2000 series fire protocol. Multiple tone selection and full CPR approval ensure conformance to local regulations. The beacon has a RED lens and a flash frequency of either 0.5 or 1 Hz (selectable on installation).

The 2000 series sounder/VADs operate over a 2-wire 2000 series loop and are loop powered i.e. no external power supply is required. The ASC2366 is compatible with automatic phased-start synchronisation controlled from the fire panel.

### Installation

Device cabling is done to the base and allows the sounder to be fitted and locked into position afterwards. A separate earth terminal is provided in the base for connecting the screen or functional earth when required.

### Efficient and versatile

These sounder/VADs can be put into different operating modes depending on local requirements. They provide high sound output at a low current, thus reducing power standby requirements and overall system cost. They are supplied with high/low volume settings as standard, allowing final audio adjustments to be made during installation. The sounder is tone selectable during installation. 32 tone settings are available.

The VAD flash rate can be set during installation to 1 Hz for normal applications or, for power conservation, to 0.5 Hz, reducing the power requirements of the unit.

### Safety & Security

Automatic daily self testing ensures that when the device is activated, everything works as expected. Pre-activation self testing ensures that a warning is raised before an event takes place, minimising the risk when notification is required. With the integrated isolator, continuity of operation is ensured even with a single short circuit on the loop.




### Details

- Standard first fix base shared with point detectors for ease of planning, logistics and installation
- Base lock, address tag, trim skirt and surface cabling support for easy installation in all conditions
- Loop powered with battery assisted activation allowing up to 128 devices per loop
- 32 selectable tones at 4 selectable volume levels that can be reconfigured from the CIE
- 3 selectable VAD power levels that can be reconfigured from the CIE
- Multi-stage evacuation support for application flexibility
- Pre-and post activation self testing ensuring maximum safety
- Automatic synchronisation
- Tri-colour diagnostic LED indicator for fast commissioning and fault finding support

# KE-AS3015W-CM

## Excellence Series intelligent addressable sounder/visual alarm, ceiling mount

## Technical specifications

### General

| | |
|---|---|
| Compatibility | Kidde Commercial Excellence Systems |
| Addressing method | DIL switch |
| Monitoring | Activated, Battery level, Continuously self-checking, Fault |

### Electrical

| | |
|---|---|
| Power supply type | Batteries, Loop powered |
| Batteries | 3 x CR123 (optional) |
| Operating voltage | 17 to 29 VDC |
| Communication voltage | 4 to 11 V pulsed |
| Current consumption | 250 µA (Quiescent)<br>1.4 mA (Activated - from the loop with batteries installed)<br>Refer to installation sheet for consumption values when only loop powered |

### Sounder

| | |
|---|---|
| Output level | 55 to 102 dB(A) - Tone dependent |
| Output level adjustment | 4 levels |
| Frequency | User selectable |
| Selectable tones | 32 |
| Synchronization | Supported |
| No. of stages | 3 |

### VAD

| | |
|---|---|
| Colour | Red |
| Rating | C-3-6 (Low) / C-3-7.5 (Mid) / C-3-9 (High) |
| Floor coverage | < 63.6 m² total<br>< 40.5 m² covering squares |
| Flash frequency | 0.5 Hz (1 flash every 2 s) |
| Synchronization | Supported |

### Physical

| | |
|---|---|
| Physical dimensions | 111 x 87 mm (Ø x H) |
| Net weight | 300 g |
| Colour | Traffic white (RAL9016) |
| Mounting type | Base mount |
| Mounting position | Ceiling |
| Mounting height | Up to 3 m |
| Mounting base | Shallow |
| Material | PC / ABS |

### Environmental

| | |
|---|---|
| Vandal proof | No |
| Operating temperature | -10 to +55°C |
| Storage temperature | −25 to +75°C |
| Relative humidity | 10 to 93% (noncondensing) |
| Environment | Indoor |
| IP rating | IP21C |

### Regulatory

| | |
|---|---|
| Compliancy | CE, REACH, RoHS 3, WEEE |
| Certification | CPR |
| Standards | EN54-3, EN54-23 |

### Compatible products

| Category | Reference | Description |
|---|---|---|
| Detection device | KE-ASA-AUXW | Intelligent addressable notification accessory - deep base (white) |
| Detection device | KE-DB3010W | Excellence series intelligent device accessory - standard base |

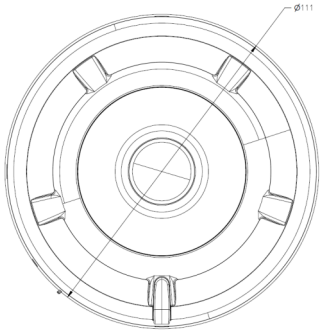


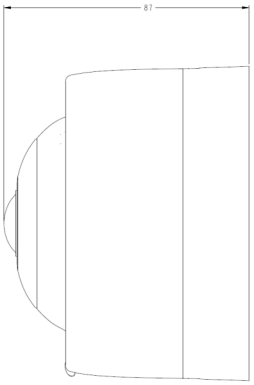


KIDDE COMMERCIAL

As a company of innovation, Kidde Global Solutions reserves the right to change product specifications without notice. For the latest product specifications, visit firesecurityproducts.com online or contact your sales representative.

Last updated on 25 August 2026 - 8:52