TVD-CB3A

TruVision 3-inch Cup Base for S6 and M Series varifocal turret IP cameras, grey

Overview

With the TVD-CB3A-W cup base, M series turret IP TVGP-M01-0402-TUR-W camera can be installed on wall/pendant mount brackets TVD-SNB-W, TVD-CBW-W and TVD-PPB-W.

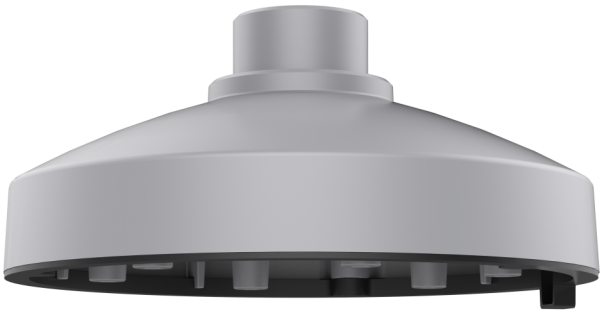

Details

- Compatible with TVT-5608H / TVT-5609H / TVT-5610H / TVT-5611H Series 6 turret IP cameras
- Compatible with wall/pendant mount brackets TVD-SNB, TVD-CBW and TVD-PPB
- Designed for convenient wiring

TVD-CB3A

TruVision 3-inch Cup Base for S6 and M Series varifocal turret IP cameras, grey

Technical specifications

General

Bracket type	Cámara
Support type	TruVision mini kupler
Bracket mounting part	Base de la copa
Mount type	Vedhæng montering

Physical

Physical dimensions	Ø 140 x 66.6 mm
Net weight	220 g
Colour	Gris (Pantone 428c)
Material	Aluminium

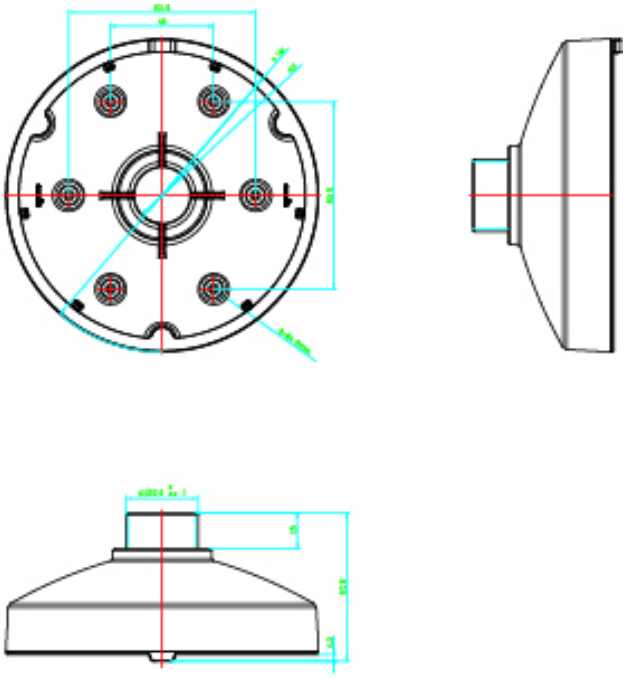

As a company of innovation, Kidde Global Solutions reserves the right to change product specifications without notice. For the latest product specifications, visit firesecurityproducts.com online or contact your sales representative.

Last updated on 13 August 2026 - 19:41