TVP-WMB-01

TruVision PTZ Wall Mount bracket

Product overview

The TVP-WMB-01 is a wall mount bracket that can be used in combination with various TruVision PTZs. It can be combined with corner or pole mount accessories to facilitate various installation types.

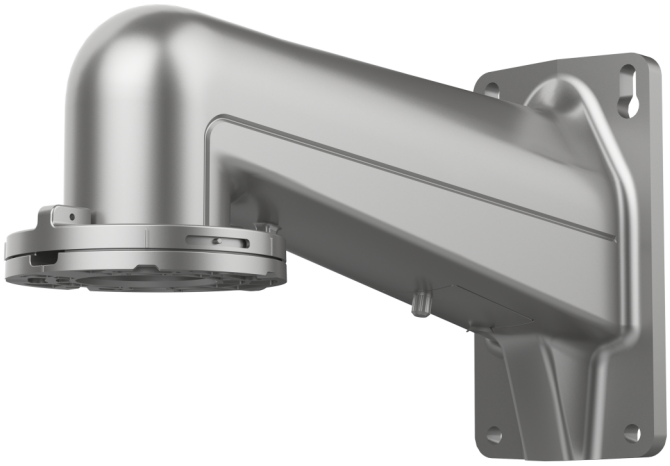

Details

- Wall mount bracket
- Compatible with corner mount and pole mount accessories TVP-PMB-02 and TVP-CMB-02
- Safety lanyard connection for secure PTZ installation
- Cable management within the bracket

TVP-WMB-01

TruVision PTZ Wall Mount bracket

Technical specifications

General

Bracket type	Caméra
Support type	PTZ Kamera
Bracket mounting part	Mounting bracket
Mount type	Vægmontering
Cable management	Yes

Physical

Physical dimensions	180 × 97 × 329 mm
Net weight	1.39 kg
Colour	Grå
Material	Alliage d'aluminium et acier

Compatible products

Category	Reference	Description
Brackets & Mounts	TVP-CMB-02	TruVision PTZ Corner Mount bracket
Brackets & Mounts	TVP-WMB-01	TruVision PTZ Wall Mount bracket
Camera	TVGP-P02-0401-PTZ-G	TruVision 4MP IP PTZ camera, H.265+, 300m IR, 25x zoom, Super Low Light, IP67, IK10, NEMA 4X, Hi-PoE/36VDC
Camera	TVGP-P02-0402-PTZ-G	TruVision 4MP IP PTZ camera, H.265+, 400m IR, 42x zoom, Super Low Light, IP67, IK10, NEMA 4X, Hi-PoE/36VDC

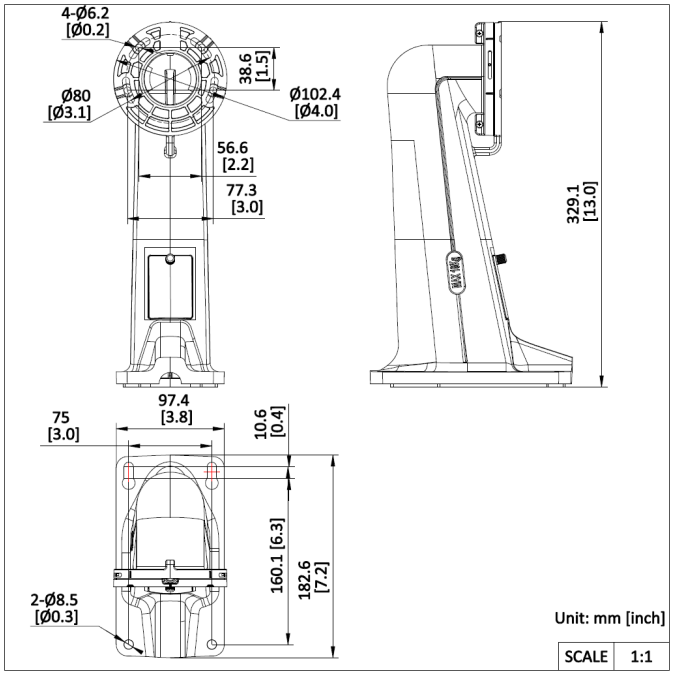

As a company of innovation, Kidde Global Solutions reserves the right to change product specifications without notice. For the latest product specifications, visit firesecurityproducts.com online or contact your sales representative.

Last updated on 27 August 2026 - 20:13