# TVGP-P01-0802-DOM-G

**Kamera kopułowa IP TruVision™ 8MP, Extreme Low Light, obiektyw 8-32 mm, szara**

## Overview

The TruVision P Series IP dome cameras have a rich set of features which make them ideal for demanding security, surveillance, and monitoring applications such as commercial, retail and large projects. With smart event capabilities available in 4 and 8MP 4K resolutions delivering high-quality images thanks to their extreme low light sensitivity brings clear visibility even in the dark and enhanced image processing.

The cameras support up to 4 configurable video streams which allow users to optimize the cameras remote live view capabilities while controlling the bandwidth usage. The motorized varifocal lens with P-iris technology allows users to remotely adjust the zoom level and focus to get crisp images anytime anywhere. In addition to the compatibility with other TruVision products and 3rd party VMS software, the cameras also support NAS recording or local MicroSD card recording to protect data in the event of network disruptions.

The cameras go above and beyond standard motion detection with enhanced alarm capabilities, including cross line detection, intrusion detection, region entrance, region exit and face capture features. With its smart person/vehicle filter feature the camera can ignore irrelevant motion or VCA events which will automatically lead to less storage consumption and faster retrieval of relevant video events.



## Szczegóły

- Maksymalna rozdzielczość: 3840 × 2160
- Kompresja H.265(+), H.264(+) i MJPEG
- 4 niezależne, konfigurowalne strumienie wideo
- Obiektyw moto-zoom 8 - 32 mm z autofokusem
- Oświetlenie IR do 50 m
- Obiektyw P-iris
- ONVIF Profile S, G i T
- Rozbudowana analityka wideo (VCA)
- Szeroki zakres dynamiki do 120 dB
- Nagrywanie brzegowe do 256 GB z opcjonalną kartą SD

# TVGP-P01-0802-DOM-G

## Kamera kopułowa IP TruVision™ 8MP, Extreme Low Light, obiektyw 8-32 mm, szara

## Specyfikacja techniczna

### General

| | |
|---|---|
| Technology | IP |
| Video standard | NTSC, PAL |
| Image settings | De-Fog, Vue du couloir, Miroir, Région d'intérêt (ROI) |
| Privacy masking | Yes |
| Software compatibility | Milestone XProtect, OnGuard, TruVision Navigator, TVRmobile, Logiciel de navigation |

### Camera

| | |
|---|---|
| Sensor size | 1 / 1.8 " |
| Max. resolution | 8 MPX |
| Sensor scan | Progressif |
| Sensor type | CMOS |
| Shutter time | 1/3 s to 1/100,000 s |

### Lighting performance

| | |
|---|---|
| WDR type | Vrai WDR |
| WDR | 120 dB |
| Digital noise reduction | 3D DNR |
| Day/night | Vrai jour / nuit |
| Motorized IR cut filter | Yes |
| Color sensitivity | Color: 0.004 Lux @ (F1.4, AGC ON),B/W: 0 Lux with IR |
| Infrared (IR) | Yes |
| IR range | Up to 50 m |
| IR wavelength | 850 nm |

### Encoding

| | |
|---|---|
| Video streams | 4 |
| Main stream compression | H.264, H.264+, H.265, H.265+ |
| Sub stream compression | H.264, H.265, M-JPEG |
| Third stream compression | H.264, H.265 |
| Video bit rate | 32 to 16 Mbps |
| Main stream resolutions | 1280 x 720 (XVGA), 1920 x 1080 (1080p), 2688 x 1520, 3200 x 1800, 3840 x 2160 |
| Sub stream resolutions | 1280 x 720 (XVGA), 640 x 360 (nHD), 640 x 480 (VGA) |
| Third stream resolutions | 1280 x 720 (XVGA), 1920 x 1080 (1080p), 640 x 360 (nHD), 640 x 480 (VGA) |

### Lens

| | |
|---|---|
| Lens type | Varifocale motorisée |
| Focal length | 8 to 32 mm: horizontal FoV 41.8 to 15°, vertical FoV 22.9 to 8.5°, diagonal FoV 48.7 to 17.1° |
| Auto focus | Yes |
| Motorized zoom | Yes |

### DORI

| | |
|---|---|
| Detection | 218 to 580 m |
| Observation | 86.5 to 230.2 m |
| Recognition | 43.6 to116 m |
| Identification | 21.8 to 58 m |

### Network

| | |
|---|---|
| Network interface | RJ-45 10/100 Mbit/s auto-adaptable interface Ethernet |
| Integration | CGI, ISAPI, ONVIF profil G, ONVIF profil S, ONVIF Profile T |
| Supported network protocols | 802.1x, Bonjour, DDNS, DHCP, DNS, FTP, HTTP, HTTPS, ICMP, IGMP, IPv4, IPv6, NTP, PPPoE, Qos, RTCP, RTP, RTSP, SMTP, SNMP, TCP/IP, UPnP |

### Audio

| | |
|---|---|
| Audio compression | G.711alaw, G.711ulaw, G.722.1, G.726, MP2L2, MP3, PCM |
| Audio in | 1 input (line in), terminal block, max. input amplitude: 3.3 Vpp, input impedance: 4.7 KΩ, |
| Audio out | 1 output (line out), terminal block, max. output amplitude: 3.3 Vpp, output impedance: 100 Ω |

### Alarm I/O

| | |
|---|---|
| Alarm inputs | 2 |
| Alarm outputs | 2 outputs (24 VAC/VDC, 1A max) |

### Storage

| | |
|---|---|
| Local storage support | Yes |
| Local storage type | Built-in Micro SD/SDHC/SDXC card slot |
| Max. SD card capacity | 256 GB |

### Video intelligence

| | |
|---|---|
| Alarm trigger | HDD error, HDD full, Invalid login, IP address conflict, Network disconnected, Sabotage |
| ROI | 5 fixed regions for main stream and sub-stream |
| Smart event | Détection de mouvement avancée, Audio exception detection, Mise au point, Face capture, Détection d'intrusion, Détection de passage à niveau, Détection de suppression d'objet, People counting, People management, Détection d'entrée région, Détection de région de sortie, Changement de scène, Unattended baggage detection |

### Electrical

| | |
|---|---|
| Operating voltage | 12 VDC ± 25%, 0.9 A, 24 VAC ± 20%, 0.75 A, two-core terminal block, PoE: 802.3af, Class 3, 36 V to 57 V, 0.36 A to 0.23 A |
| Power consumption | 12 VDC, 0.9 A, max. 10.8 W, 24 VAC, 0.75 A, max. 10.8 W, PoE: 802.3at, max. 12.9 W |

### Physical

| | |
|---|---|
| Physical dimensions | Ø162 × 141.8 mm<br>Ø6.4 × 5.6 in. |
| Net weight | 1420 g<br>3.1 lb. |
| Shipping weight | 2058 g<br>4.5 lb. |
| Colour | Grey |
| Form Factor | Dome |

# TVGP-P01-0802-DOM-G

## Kamera kopułowa IP TruVision™ 8MP, Extreme Low Light, obiektyw 8-32 mm, szara

### Environmental

| | |
|---|---|
| Vandal proof | Yes |
| Impact rating | IK10 |
| Environment | Outdoor |
| Operating temperature | -40 to +60°C<br>-40 to +140°F |
| Relative humidity | <95% noncondensing |
| IP rating | IP67 |

### Regulatory

| | |
|---|---|
| Compliancy | CE, FCC, REACH, RoHS, UL, WEEE |

### Wyroby zgodne

| Kategoria | Odniesienie | Opis |
|---|---|---|
| Brackets & Mounts | TVD-CB9 | Pierścień montażowy TruVision do zewnętrznych kamer kopułowych serii 7 |
| Brackets & Mounts | TVD-CBW | Uchwyt ścienny TruVision kompatybilny z pierścieniem montażowym TVD-CB2, TVD-CB3, TVD-CB5A, TVD-CB6, TVD-CB7 |
| Brackets & Mounts | TVD-M-PMA-SS | Adapter do montażu na słupie dla kamer TVB serii 4/5/6 (stal nierdzewna) |
| Brackets & Mounts | TVD-PPB | Uchwyt sufitowy (wys. 54 cm) do kamer kopułowych TruVision, wymaga dodatkowo TVD-CB5, TVD-CB3 lub TVD-CB2 |
| Brackets & Mounts | TVD-SNB-BB | Puszka montażowa do uchwytu TruVision TVD-SNB |

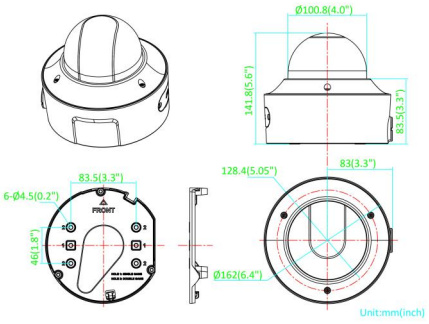


Będąc firmą innowacyjną, Kidde Global Solutions zastrzega sobie prawo do zmian w specyfikacji wyrobów bez uprzedzenia. W celu uzyskania najnowszych specyfikacji prosimy o wizytę na stronach pl/firesecurityproducts.com lub kontakt z przedstawicielem handlowym.

Last updated on 12 November 2026 - 18:57