TVD-SNB-BB

TruVision TVD-SNB back box, 4-directional conduit, indoor & outdoor

Overview

TVD-SNB-BB TruVision Back Box can be used together with either TruVision TVD-SNB or TVD-M2-WM wall-mount bracket.

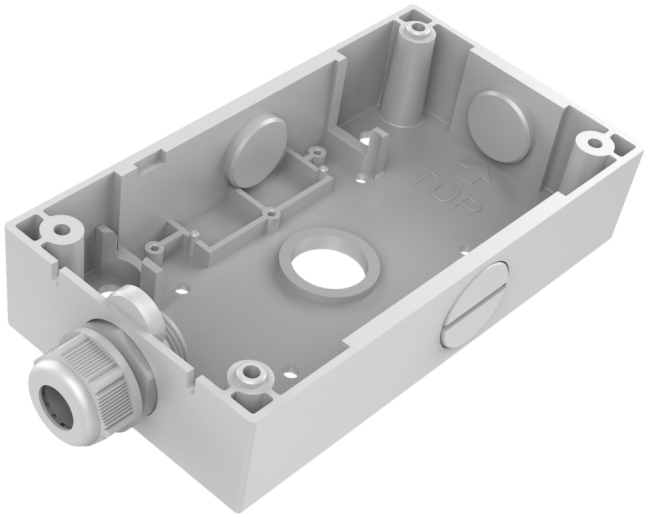

Details

- Suitable for the TruVision wall brackets
- TruVision back box
- Aluminum alloy

TVD-SNB-BB

TruVision TVD-SNB back box, 4-directional conduit, indoor & outdoor

Technical specifications

General

Bracket type	Telecamera
Support type	TruVision mini kupler
Bracket mounting part	Box di connessione
Mount type	Montaggio a superficie

Physical

Physical dimensions	182 x 99.5 x 42 mm
Net weight	485 g
Colour	Grigio (Pantone 428c)
Material	Aluminium

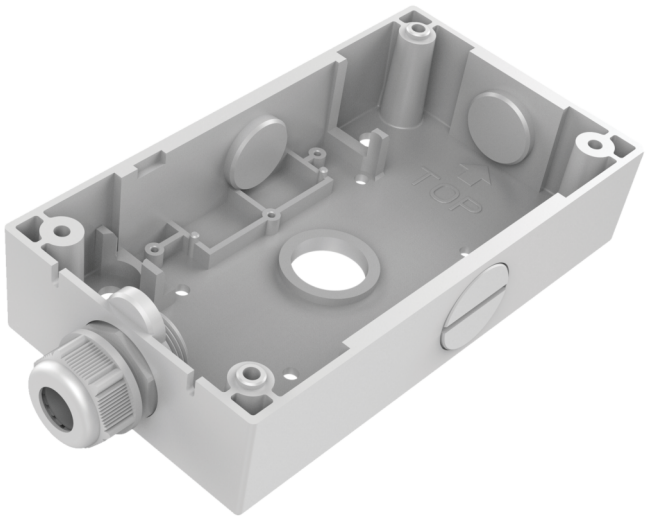

As a company of innovation, Kidde Global Solutions reserves the right to change product specifications without notice. For the latest product specifications, visit firesecurityproducts.com online or contact your sales representative.

Last updated on 27 August 2026 - 18:40