TVFC-M01-0403-DOM-G

Caméra dôme IP Full Color Jour/Nuit TruVision™ 4 Mpx, objectif 2.8 à 12 mm, lumière blanche 40 m



Overview

TruVision Full Color IP cameras offer a number of advantages over traditional IP cameras. The cameras available in 4 and 8 megapixel, capture full color video, allowing for clearer and more accurate identification of people and objects in the field of view. This is especially useful in low light conditions, where traditional IP cameras may produce footage that is difficult to interpret due to the lack of color.

The built-in supplemental white light availabe on most models, ensures that even in complete darkness, the cameras are able to capture clear and usable footage. This makes them ideal for use in a variety of settings, including outdoor areas or poorly lit indoor spaces.

Overall, this new range of TruVision Full Color IP Surveillance cameras are a reliable and advanced choice for any surveillance system, providing high quality, full color video footage that can aid in the identification and detection of potential threats or incidents.

Détails

- Résolution maximale : 4 Mpx (2688 x 1520)
- Images en couleur 24/7
- Objectif varifocal motorisé de 2,8 à 12 mm
- Lumière blanche supplémentaire intégrée jusqu'à 40 m
- Classification des personnes et des véhicules
- Intelligence vidéo : détection d'intrusion, détection de franchissement de ligne, détection d'entrée/sortie, capture de visage
- Compression H.265+.
- Normes ouvertes ONVIF Profile G, S, T
- Enregistrement embarqué sur carte SDHC jusqu'à 256 Go

TVFC-M01-0403-DOM-G

Caméra dôme IP Full Color Jour/Nuit TruVision™ 4 Mpx, objectif 2.8 à 12 mm, lumière blanche 40 m

Spécifications techniques

General

Technology	IP Full Color
Video standard	NTSC, PAL
Image settings	De-Fog, Widok korytarzowy, Lustro, Pole uwagi (ROI)
Privacy masking	Yes
Software compatibility	Milestone XProtect, TruVision Navigator, TVRmobile, Webbrowser
Note regarding VCA resource mode	Third stream and Hallway View are not available in Smart Event and Face Capture mode. Standard Event mode supports these features but also disables the person/vehicle classification options for certain events.

Camera

Sensor size	1/1.8"
Max. resolution	4 MPX
Sensor scan	Progressiv
Sensor type	CMOS
Digital S/N ratio	≥ 52 dB
Shutter time	1/3 to 1/100,000 s

Lighting performance

WDR	130 dB
White light	Yes
White light range	Jusqu'à 40 mètres
Digital noise reduction	3D DNR
Color sensitivity	Color: 0.0005 Lux @ (F1.0, AGC ON), 0 Lux with white light
Infrared (IR)	No

Encoding

Video streams	3
Main stream compression	H.264, H.264+, H.265, H.265+
Sub stream compression	H.264, H.265, MJPEG
Third stream compression	H.264, H.265
Video bit rate	32 Kbps to 8 Mbps
Main stream resolutions	1280 x 720 (XVGA), 1920 x 1080 (1080p), 2688 x 1520
Sub stream resolutions	1280 x 720 (XVGA), 640 x 360 (nHD), 640 x 480 (VGA)
Third stream resolutions	1280 x 720 (XVGA), 1280 x 960 (720p), 1920 x 1080 (1080p), 640 x 360 (nHD), 640 x 480 (VGA)
Max. resolution @ fps	2688 x 1520 @ 25/30 fps
Third stream limitation	Supports only up to 10 fps

Lens

Lens type	Zmienna zmotoryzowana
Focal length	2.8 to 12 mm, horizontal FoV 105.4 to 56.4°, vertical FoV 53.9 to 31.6°, diagonal FoV 131.8 to 65.1°
f-stop	F1.0
Auto iris	Yes

DORI

Detection	66.8 to 110.4 m
Observation	26.5 to 43.8 m
Recognition	13.4 to 22.1 m
Identification	6.7 to 11 m

Network

Network interface	RJ-45 10/100 Mbit / s selbstanpassende Ethernet-Schnittstelle
Integration	ONVIF Profil G, ONVIF Profil S, ONVIF Profile T
Supported network protocols	802.1x, ARP, Bonjour, DDNS, DHCP, DNS, FTP, HTTP, HTTPS, ICMP, IGMP, IPv4, IPv6, NTP, PPPoE, Qos, RTCP, RTP, RTSP, SMTP, SNMP, SSL/TLS, TCP/IP, UPnP

Audio

Audio compression	G.711alaw, G.711ulaw, G.722.1, G.726, MP2L2, PCM
Audio in	1 input (line in), 2-core terminal block, max. input amplitude: 3.3 Vpp, input impedance: 4.7 KΩ, interface type: non-equilibrium
Audio out	1 output (line out), 2-core terminal block, max. output amplitude: 3.3 Vpp, output impedance: 100 Ω, interface type: non-equilibrium
Audio bit rate	64 Kbps (G.711ulaw/G.711alaw)/16 Kbps (G.722.1)/16 Kbps (G.726)/32 to 192 Kbps (MP2L2)/8 to 320 Kbps

Alarm I/O

Alarm inputs	1
Alarm outputs	1 output (max. 24 VDC/24 VAC, 1 A)
Alarm I/O connection	Terminal block

Storage

Local storage type	Built-in Micro SD/SDHC/SDXC card slot
Max. SD card capacity	256 GB

Video intelligence

Alarm trigger	HDD error, HDD full, Invalid login, IP address conflict, Motion detection, Network disconnected, Video tampering
Smart event	Zaawansowana detekcja ruchu, Face capture, Wykrywanie włamania i napadu, Line crossing detection, Motion detection, Wykrywanie wejścia do regionu, Region exiting detection, Zmiana sceny
Intelligence options	Person/vehicle detection on motion, line crossing, intrusion detection and entry/exit detection only (when VCA resource mode Smart Event is enabled)

Electrical

Operating voltage	12 VDC ± 25%, 0.9 A, max. 10.8 W, Ø 5.5 mm coaxial power plug,reverse polarity protection, PoE: 802.3af, Class 3, 36 V to 57V, 0.36 A to 0.23 A, max. 12.9 W
Power consumption	max. 12.9 W

TVFC-M01-0403-DOM-G

Caméra dôme IP Full Color Jour/Nuit TruVision™ 4 Mpx, objectif 2.8 à 12 mm, lumière blanche 40 m

Physical

Physical dimensions	Ø 155 × 152 mm Ø 6.1 × 6.0 in.
Net weight	1600 g 3.4 lb.
Shipping weight	2150 g 4.6 lb.
Colour	Grau
Material	Aluminium
Form Factor	Dome

Environmental

Impact rating	IK10
Environment	Draussen
Operating temperature	-30 to +60°C -22 to +140°F
Relative humidity	<95% noncondensing
IP rating	IP67

Regulatory

Compliancy	CE, FCC, REACH, RoHS, UL, WEEE

Produits compatibles

Catégorie	Référence	Description
Brackets & Mounts	TVD-CBW	Fixation murale TruVision compatible avec les coupoles TVD-CB2, TVD-CB3, TVD-CB5A, TVD-CB6, TVD-CB7.
Brackets & Mounts	TVD-PPB	Support plafond pendant pour dômes robustes TruVision™ TVD-61XX et ultraView™.

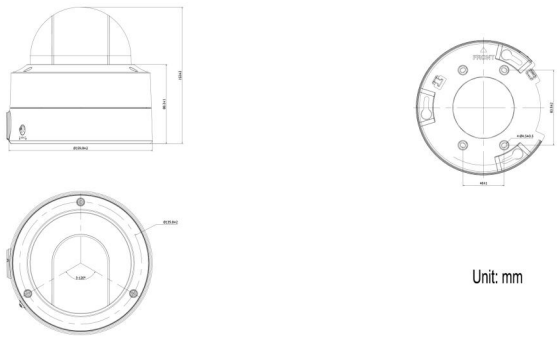

Unit: mm

En tant que société d'innovation, Kidde Global Solutions se réserve le droit de modifier les spécifications des produits sans préavis. Pour les dernières spécifications du produit, visitez le site web fr.firesecurityproducts.com ou contactez votre représentant commercial.

Last updated on 12 November 2026 - 18:57