# TVD-CB9

## TruVision Cup Base for S7 outdoor dome camera

### Overview

The TVD-CB9 cup base can be used in combination with mounting brackets TVD-SNB, TVD-PPB and TVD-CBW

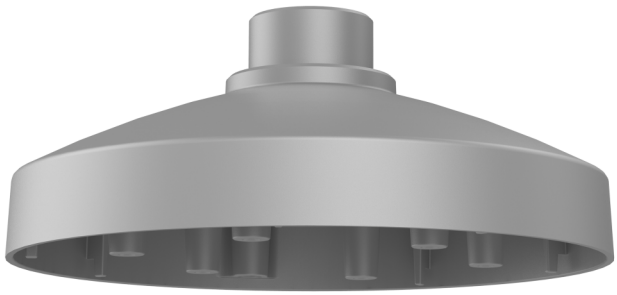

### Dettagli

- Compatible with camera brackets TVD-SNB, TVD-PPB, TVD-CBW
- For use with S7 outdoor dome cameras TVD-5715, TVD-5716, TVD-5717, TVD-5718, TVD-5719, TVD-5720, TVD-5721

# TVD-CB9

## TruVision Cup Base for S7 outdoor dome camera

## Specifiche tecniche

### General

| | |
|---|---|
| Bracket type | Kamera |
| Support type | TruVision mini kupler |
| Bracket mounting part | Spodek |
| Mount type | Vedhæng montering, Vægmontering |

### Physical

| | |
|---|---|
| Physical dimensions | Ø 155 mm<br>Ø 6.1 in. |
| Net weight | 230 g<br>0.50 lb. |
| Colour | Szary (Pantone 428c) |
| Material | Aluminium |

### Environmental

| | |
|---|---|
| Environment | Indendør, Udendørs |

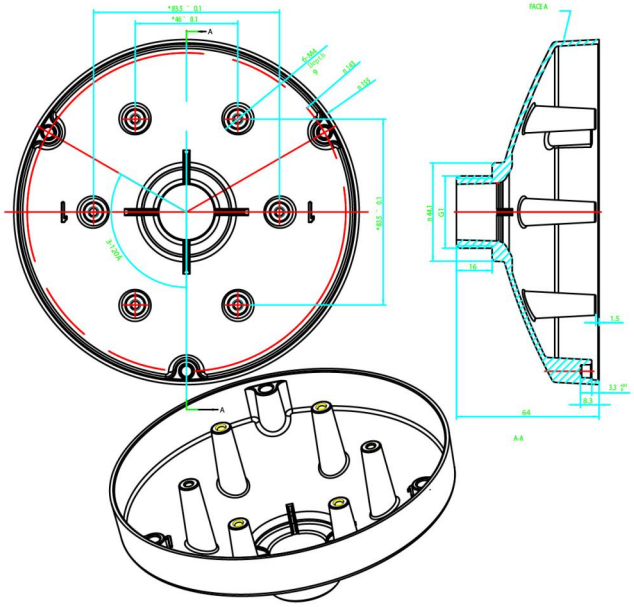

In quanto azienda in continua innovazione, Kidde Global Solutions si riserva il diritto di modificare le specifiche del prodotto senza preavviso. Per avere informazioni sempre aggiornate, visita it.firesecurityproducts.com online o contatta il tuo riferimento commerciale.

Last updated on 12 November 2026 - 18:57